Figure 4
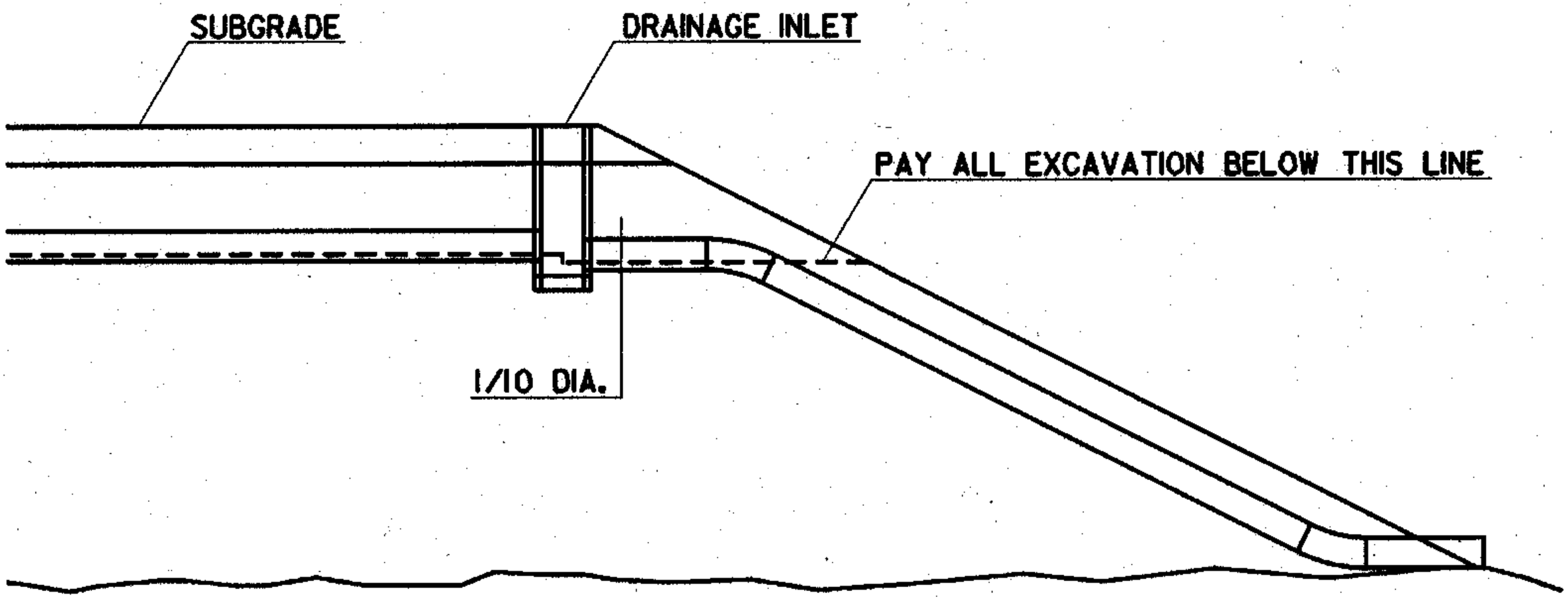
Slope Pipe Payment Line, Embankment